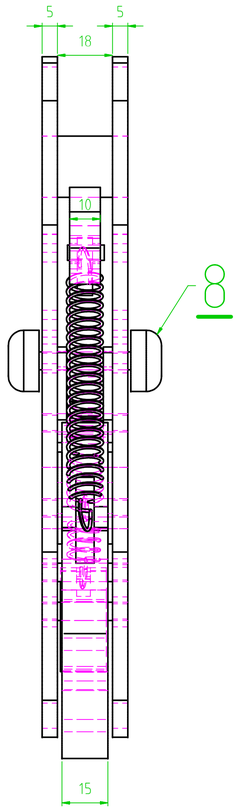

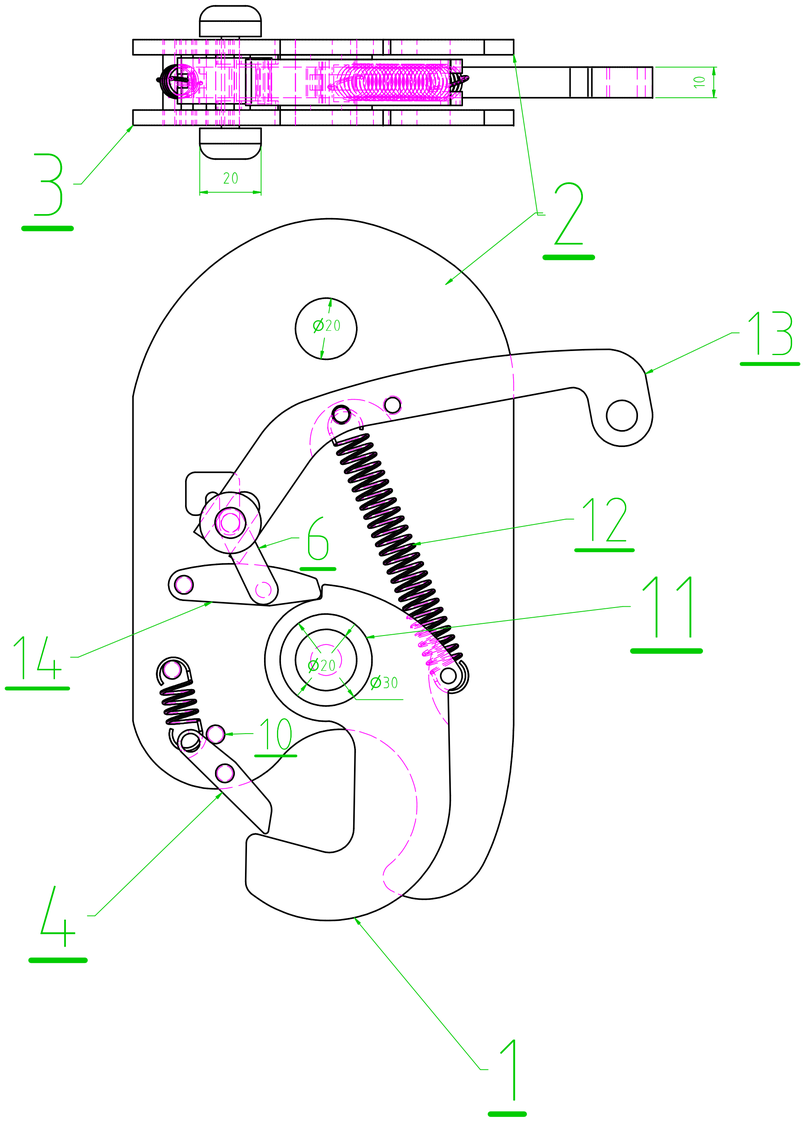

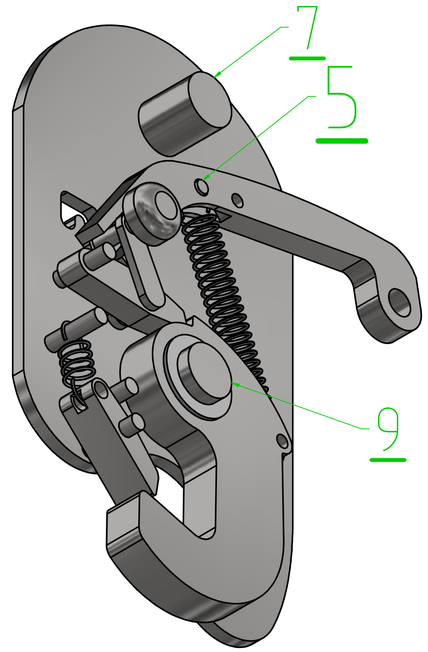

side plate opened

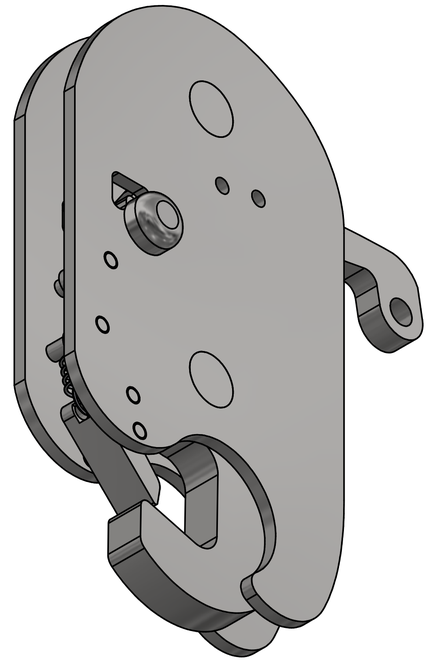

side plate mounted

Parts List			
ITEM	QTY	PART NUMBER	DESCRIPTION
1	1	Hook	316L
2	1	Side Plate 5 mm	316L
3	1	Side Plate 5 mm	316L
4	1	Hook Jaw	316L
5	2	6 mm pin	316L
6	2	4mm rod	316L
7	2	Lifting Pin of the shackle	316L
8	1	Safety Pin	316L
9	2	20mm pin	316L
10	4	6mm stopper pin	316L
11	2	ID 20mm Washer	316L
12	2	Extension Spring1	316L
13	1	Handle	316L
14	1	Hook Stopper	316L

SWL Min. 12500 N

All Materials are AISI 316L with breaking load 490 N/mm2

GEPA-FIBERGLAS SANAYI VE TICARET A.S.
Yan Sanayi Bolgesi. Harmandali sok. No=10 , Aydintepe
34947 TUZLA / ISTANBUL / TURKEY

FILE NAME GK2 AUTOMATIC RELEASE	FSCM NO HOOK	SHEET 1/1	SCALE 1/1
SIZE			
DRAWN 22.12.2015 Yasin DOGAN			
CHECK		GK2 AUTOMATIC RELEASE HOOK	
APPR.		GK2 GENERAL LAYOUT	
ISSUED			
REV PRELIMINARY		DWG NO GK2 001	
CONTRACT NO			